Glass Chiller 2 Door

Lift off Lid

The Culinaire® range of Glass Chiller refrigerators from Stoddart Manufacturing are the most cost effective solution for keeping a ready supply of chilled glasses for your bar.
The glass chiller is a proven work horse with a solid construction that keeps the purchase and operating costs to a minimum.
The fridge is designed so that it is easy to load and access glasses.

A unique feature of the glass chiller is the reduced height control panel that allows the glass chiller to be positioned as close as possible to the beer font.

It is available in 1 or 2 door sizes to suit your bar or counter service application.

Models:

SPRF.GC.2D.X.Y

Where:

SPRF	= Standard Product Refrigerated
GC	= Glass Chiller
2D	= 2 Door
X	= **L** – Left Handed Control Panel = **R** – Right Handed Control Panel

e.g.: for specification and ordering

Culinaire Model SPRF.GC.2D.R.

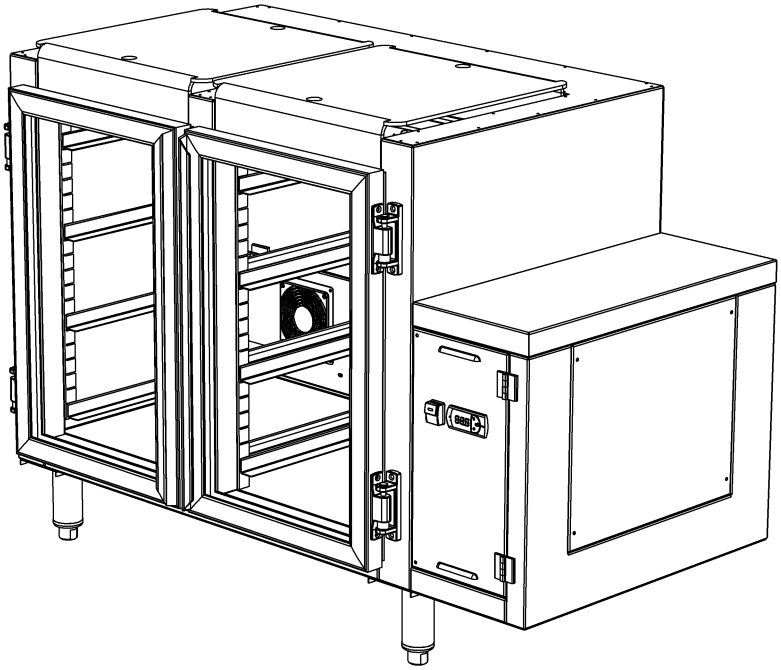

Features and Benefits:

- Supplied with Visual-line® low energy triple glazed doors.
- The unit is supplied with a lift off polycarbonate night lid to reduce operating costs.
- Full length refrigeration system mounted on rear wall provides even, fan-forced, cooling and effective air temperature control.
- Fridge meets MEPS compliance standards to reduce electricity costs and minimise environmental impact.
- The unit is constructed from 0.9mm 304 No4 finish stainless steel for hygiene and long service life.
- The unit is supplied with on/off switch and digital thermostat.
- The unit is ready for connection to a remote refrigeration unit (by others) located outside the bar working area.
- R507 or 404A refrigerant are used to provide efficient cooling and ensures we protect the environment for future generations.
- 50 mm insulation H grade polystyrene reduces operating costs.
- Supplied with 150mm high adjustable legs. Legs can be removed if required.
- The service compartment height is reduced to allow the positioning of beer fonts near as possible to the glass chiller unit.

Due to continuous product research and development, the information contained herein is subject to change without notification.

Stoddart Manufacturing
Tom Stoddart Pty Ltd. ABN 16 009690251
149 Jackson Road, Sunnybank Hills, Qld

Tel +61 7 33455011
Fax +61 7 33441000
Email: sales@stoddart.com.au
Web: www.stoddart.com.au

Printed date 11/12/2008
Revision Date 22/07/08

Glass Chiller 2 Door

Lift of Lid

Standards

The standard model is supplied with a right hand control panel and left hand hinged doors.

Additional models are listed with left hand service compartments and right hand hinged doors.

Please specify which model at time of order.

Models:

SPRF.GC.2D.X

Where:

SPRF	= Standard Product Refrigerated
GC	= Glass Chiller
2D	= 2 Door
X	= **L** – Left Handed Control Panel = **R** – Right Handed Control Panel

e.g.: for specification and ordering

Culinaire Model SPRF.GC.2D.L

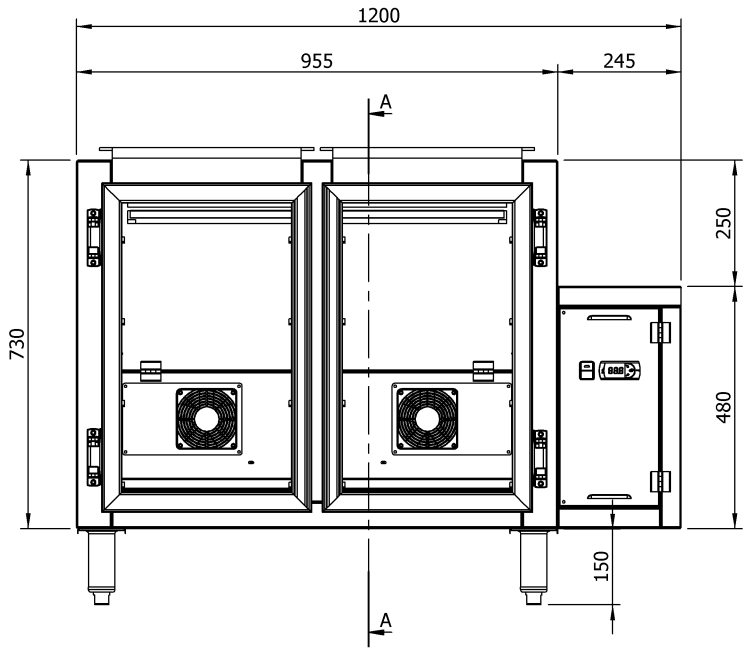

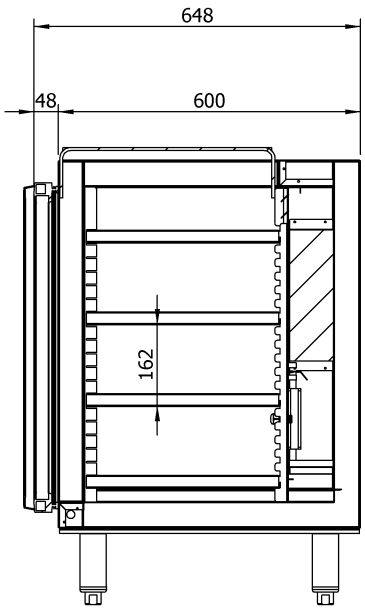

SECTION A-A

Model	Refrigerant	Power Req.	Weight
SPRF.GC.2D.L.R507	R507	240v 5A	
SPRF.GC.2D.R.R507	R507	240v 5A	
SPRF.GC.2D.L.404A	404A	240v 5A	
SPRF.GC.2D.R.404A	404A	240v 5A	

Due to continuous product research and development, the information contained herein is subject to change without notification.

Stoddart Manufacturing
Tom Stoddart Pty Ltd. ABN 16 009690251
149 Jackson Road, Sunnybank Hills, Qld

Tel +61 7 33455011
Fax +61 7 33441000
Email: sales@stoddart.com.au
Web: www.stoddart.com.au

Printed date 11/12/2008
Revision Date 22/07/08