Culinaire

CBC128 - WIRING DIAGRAM

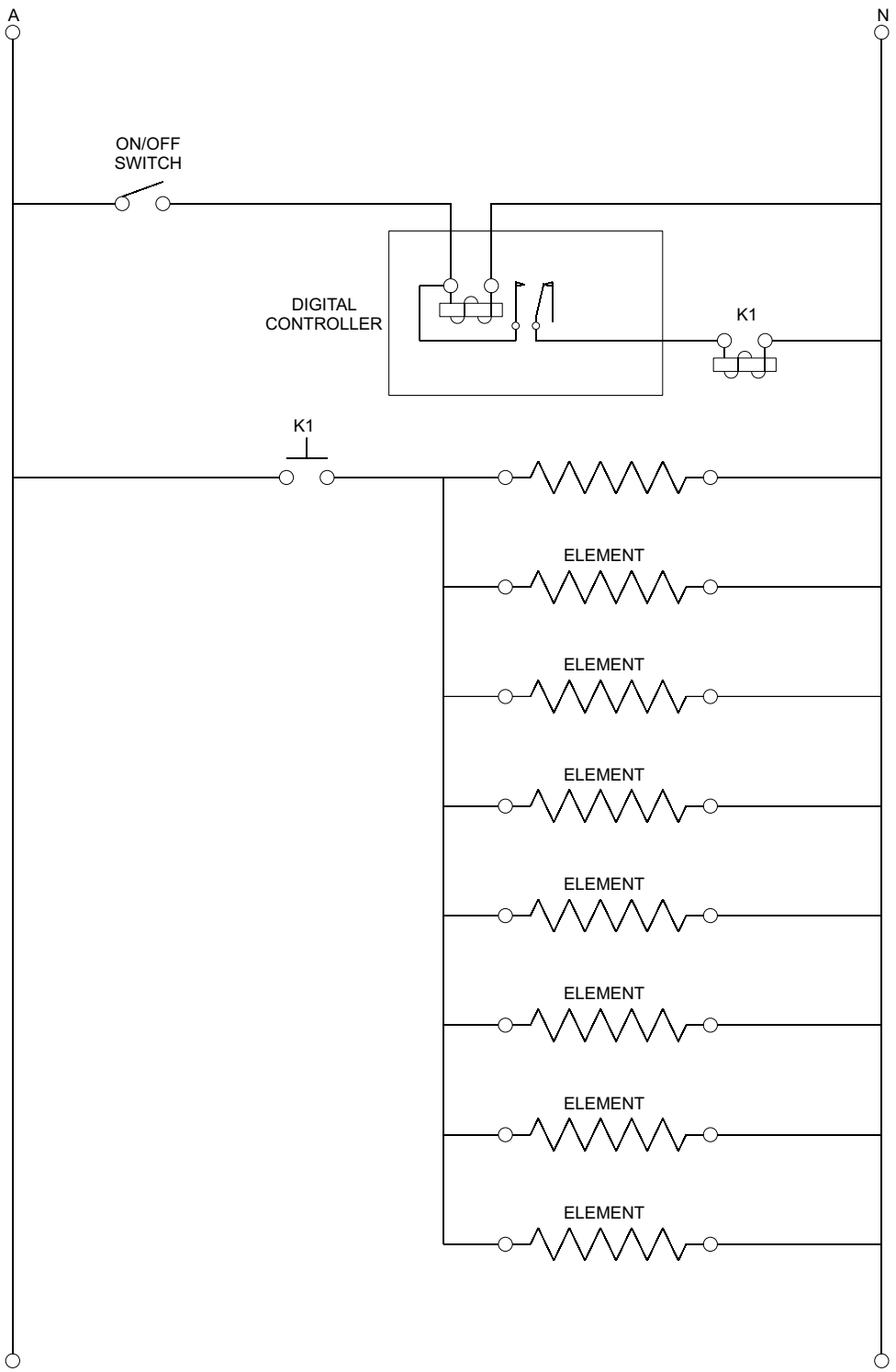

DATED:6.12.06